GAMMON

GAMMON TECHNICAL PRODUCTS, INC.
P.O.BOX 400 - 2300 HWY 34
MANASQUAN, N.J. 08736

PHONE 732-223-4600
FAX 732-223-5778
WEBSITE www.gammontech.com
STORE www.gammontechstore.com

AQUA-GLO OPERATING PROCEDURE MANUAL

BULLETIN 76 (12-04)

AQUA-GLO SERIES III WATER DETECTOR KIT OPERATING PROCEDURE MANUAL
MODELS GTP-322 AND GTP-323

INTRODUCTION

The Aqua-Glo Series III Water Detector Kit is used to measure the amount of undissolved water in kerosene-type jet fuels. It can be used on other fuels by following special procedures in the section titled, “Other Fluids.”

A measured sample of fuel is passed through a sodium fluorescein treated detector pad or “test pad.” Undissolved (free) water in the fuel will react with the sodium fluorescein. When the pad is subsequently illuminated by ultraviolet light, the coating that was contacted by free water will fluoresce (glow) a bright yellow with the brightness increasing for increasing amounts of free water in the fuel sample. Water content is read out in parts per million by volume. By varying the fuel sample size, the standard range of the instrument of 1 to 12 ppm can be increased to as much as 60 ppm of free water.

METHOD DESCRIPTION

The primary method that is covered by this document is based on ASTM D3240.

The following procedure is primarily applicable for **dynamic** line sampling; that is, taking the fuel sample directly from the fuel system and through the test pad without exposing the sample to the atmosphere or to a sample container. The use of sample containers such as bottles or cans for the temporary storage or transport of the sample will result in large errors due to changes in temperature, absorption of water on container walls, etc., and is not recommended. The amount of free water in a sample is very sensitive to temperature.

For a simplified step-by-step procedure, go to the end of this manual for the Abbreviated Procedure; first time users should read the entire manual first.

If there is absolutely no alternative and tests must be performed on fuel samples in containers, email us for procedure and equipment recommendations.

CALIBRATION

An encapsulated pad labeled “Calibrating Standard” is provided in a envelope in each kit. Note the “set” number on the back of this pad. Place the calibrating standard in the window with the colored side facing the instrument. Turn on the ultraviolet lamp and then press the switch button on the photocell comparator (“Instrument Pack”). This button is located within a cup on the instrument. Adjust the light modulating lever until the red pointer is steady at the zero “O” in the center of the meter. Always move the light modulating lever in the same direction when zeroing the photocell comparator, when calibrating or testing, to eliminate errors caused by clearance in the mechanical linkage. This may take 45 seconds. If the reading obtained does not agree with the “set” number on the calibrating standard, adjust the photocell comparator by removing the plug screw on the side (at the 45 degree bend). Insert a small screwdriver, and adjust as necessary. Repeat the above procedure until the reading obtained agrees with the calibrating standard “set” number. **THE INSTRUMENT SHOULD BE CALIBRATED PRIOR TO EACH USE AND AFTER EACH HOUR OF USE.**

Return the calibrating standard to the envelope in the kit. Do not use a calibrating standard from another kit. Each calibrating standard is matched to a fluorescing standard which is secured under the panel labeled “Fluorescing Standard.” The code number on the Fluorescing Standard must be the same as the code number on the Calibrating Standard **but the “set” points need not be the same**. Instruments that have been manufactured since 1998 have a small decal on the stationary face of the hinge providing the code number. NOTE: We urge our customers to label older instruments accordingly so that operators can easily determine if they are using the matching calibrating standard.

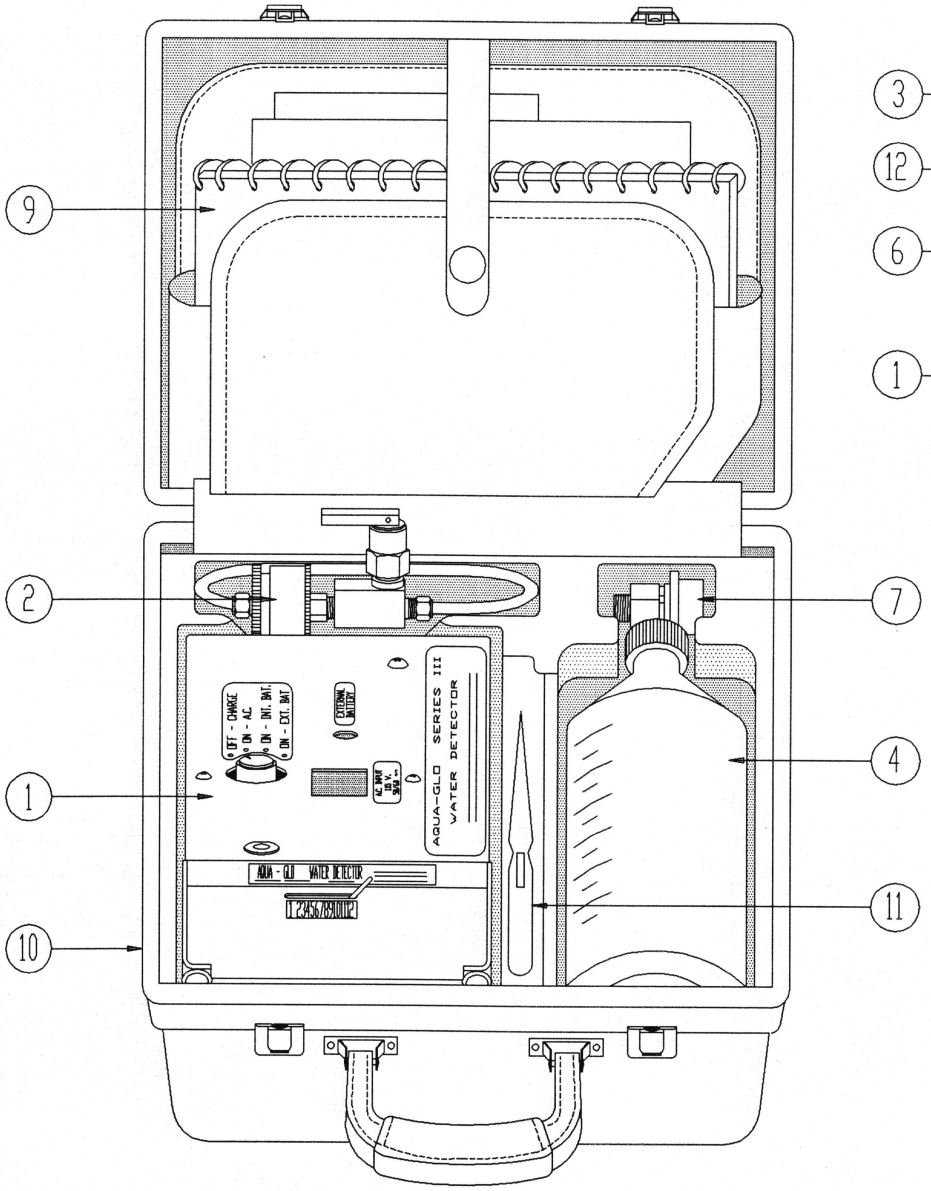

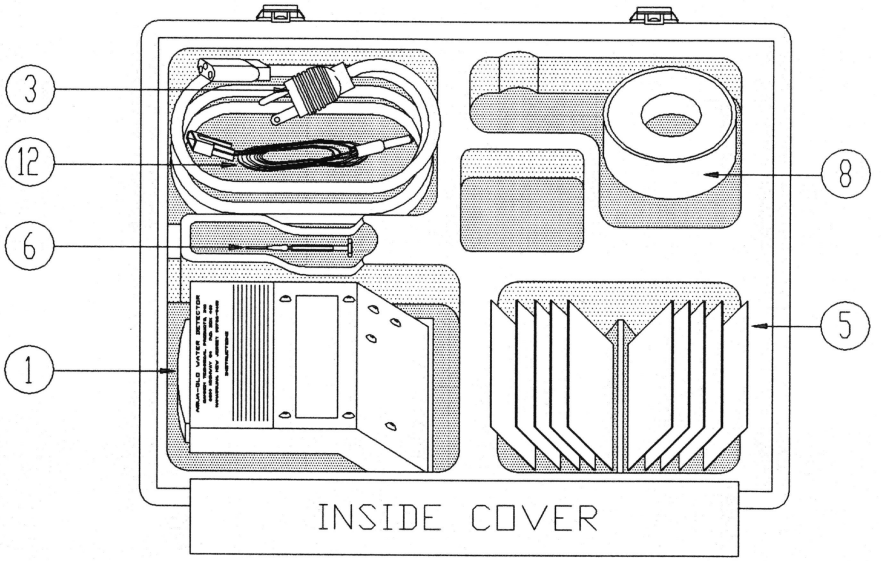

ITEM	DISCRIPTION	PART #	QTY.
1	LIGHT CHAMBER & INSTRUMENT PACK	GTP-766	1
2	PAD HOLDER ASSY	GTP-191	1
3	POWER CORD	GTP-2402	1
4	CALIBRATED BOTTLE	GTP-294	1
5	* WATER DETECTOR PADS	GTP-25	25
6	JEWLERS SCREWDRIVER	GTP-765	1
7	QUICK DISCONNECT COUPLER	GTP-992-4M	1
8	TEFLON PIPE SEALANT TAPE	GTP-814	1
9	INSTRUCTION BOOKLET	BULL. 76	1
10	CASE	GTP-761	1
11	TWEEZER	GTP-293	1
12	EXTERNAL BATTERY POWER CORD	GTP-2403	1

NOTE
* PART NUMBER GTP-25 CONTAINS 50 TEST PADS ONLY 25 ARE INCLUDED IN THIS KIT.

AQUA-GLO SERIES III WATER DETECTOR KIT

P/N GTP-322

SAMPLE CONNECTION

It has been explained that this kit is designed for dynamic (fuel flowing in the system) line samples. The sample connection must be planned so that the flow path to the test pad is as short as possible and so that there are no traps or pockets that may collect water.

The sampling connection may be located on the pipe before and after a filter vessel (filter separator or monitor) to allow you to compare the readings to determine the performance of the filter in removing free water. Connections should be available for obtaining Aqua-Glo test results all the way from the refinery to the aircraft refueling nozzle.

FLUSHING

Attach the empty test pad holder assembly to the quick disconnect coupler at the sample connection. Open the toggle valve by lifting the handle. Allow at least 1 liter of fluid to pass through the assembly into a collection container. Opening and closing the valve several times will insure better flushing. Remove the assembly after flushing.

TEST PROCEDURE - **NOTE: An abbreviated test procedure may be found on last page of this manual.**

Open the test pad holder assembly and insert a test pad in the outlet half using tweezers. Be sure that the orange colored side of the pad is facing upstream (you can see the orange side with the pad in the holder).

Do not remove the test pad from the hermetically sealed package until ready to use. Do not touch the pad with fingers; use the included pointed tweezers to handle the pad at all times. Do not allow any discrete water droplets to come into contact with the pad (from rain, sneezing, coughing etc.). Exposure of the test pad to the atmosphere, especially on humid days, will also ruin the pad in a matter of minutes.

Attach the test pad holder assembly to the quick disconnect. Open the toggle valve.

Pass 500 ml of fuel through the pad, accurately measuring the test sample quantity in the calibrated plastic bottle in the kit. Normal sample volume is 500 ml of test fuel, but if the reading is off scale (on high side), a sample volume as small as 100 ml in volume may be used in a repeat test using a new pad, by applying a correction factor, as explained below. In the latter case, a small graduated cylinder should be used to measure smaller sample volumes accurately. The reading must be adjusted to allow for a smaller sample volume; see Calculation on the next page.

SPOILAGE OF WATER DETECTOR PADS

These pads are now heat-sealed in aluminized composite envelopes to ensure that moisture from the air will not reach the sodium fluorescein. Pads that were stored for 8 years were still in good condition, but statistical studies have proven that up to 4 or 5% of the envelopes have enough water permeability to spoil the pads. This occurs in the first six months. A spoiled pad is easily identified by its ***yellow*** color. The operator should inspect every pad before it is used. If it is not ***orange*** in color, it must not be used. Spoiled pads will cause a ***high*** reading, if used.

RATING PROCEDURE

Remove the test pad from the holder using tweezers and press **between** dry paper blotters or absorbent towels to remove excess fuel. Press firmly (about 5 lb. force) 3 or 4 times with heel of hand, moving the pad with tweezers each time.

For maximum accuracy, the test pad should be read within 3 minutes after sampling is initiated. If the test pad is not read immediately after sampling, it must be placed in a desiccator to prevent moisture pick up from the air. However, readings made on dried test pads, that is, not damp with fuel, should be avoided if possible since they will give high and erroneous results. Conversely, rating a pad which has not been well blotted will give a low reading as the excess fuel will absorb part of the ultraviolet light and decrease fluorescence.

The ultraviolet light must be on to get a reading. This can be verified when the selector switch is turned on. The center of the **white indicator button** will glow a light green if the ultraviolet tube is operating. In bright sunlight, you may have to cup your hand over the indicator to see that the button is glowing. Refer to instructions for care of battery for further guidance.

Using tweezers, put the pad (orange side in) into the test pad window under the hinged cover on the bottom of the Aqua-Glo instrument. Turn on the lamp, then press the photocell button on the instrument pack. Zero the photocell comparator meter by adjusting the light modulating lever until there is a steady reading at zero for 10-15 seconds. This may take 45 seconds or longer. Always move the light modulating lever in the same direction when zeroing the photocell comparator to eliminate errors caused by backlash. Turn off the instrument light immediately after use to conserve battery power. If the pointer will not go all the way to the zero (center), move the lever until the pointer is as close to the center as possible. If the lever is below the 1 mark, your fuel has less than 1 ppm of water. If the lever is at the 12 end of the scale, you have more than 12 ppm.

Record the instrument reading where the lever crosses the scale (estimated to the nearest tenth). Record the sample volume and the fuel temperature at the time of the test. See section titled “Comments.”

RATING PROCEDURE continued

Visual observation of the used test pad is often of value. This is easily accomplished by removing the photocell comparator assembly and viewing the test pad through the rectangular window on the side of the instrument in a darkened room with the ultraviolet light turned on. Free water in fuel is normally well dispersed and will form an even distribution of many small points of yellow fluorescence on the test pad when illuminated.

Large water drops, however, will form a few large spots of yellow fluorescence on the pad. These large spots usually are indicative of a separator element failure, rather than a coalescer element failure if the test is performed downstream of a filter separator.

CALCULATION

Correct the reading if the sample volume is other than 500 ml.

$$\text{PPM free water} = \frac{\text{scale reading} \times 500}{\text{sample volume, mL}}$$

NOTE: The velocity of the fuel through the pad will have an influence on accuracy if the flow rate is not between 600 and 800 ml/min. The 1 mm diameter orifice upstream of the test pad serves to control velocity over a wide pressure range but on site controls may be required. The orifice also serves to break up water droplets and promote uniformity of distribution on the test pad.

CARE OF BATTERY (GTP-2324)

Do not leave the Aqua-Glo light running continuously. Do not leave the battery on recharge for more than 2 days without use.

The main battery is built-in and is rechargeable. If it is ever necessary to replace it, the entire side cover of the light unit must be removed (7 screws). Then separate the wire connector having the black and red wires. The battery clamp can now be removed by first removing 2 screws, one at each end. Other components must be loosened and/or removed to remove and replace the battery. See Figure 3.

An external battery is not supplied with the kit but may be ordered as Model GTP-2404. It is useful when extended tests must be run when AC power is not available for recharging.

To recharge the internal battery, simply connect the power cord in the kit to the fitting marked “off-charge.” A full charge requires 14-16 hours. The external battery will be charged at the same time if connected.

CARE OF THE PHOTOCELL COMPARATOR (INSTRUMENT PACK)

Heavy use will eventually deplete the 9 volt battery in the instrument pack. If very frequent recalibration is necessary, this can mean that the battery is weak. If the meter responds sluggishly, this may also indicate a weak battery. Replace with any good quality 9 v battery or order our Model GTP-892. Remove the 4 battery cover screws to reach the battery.

Frequently wipe dust and finger marks from the green glass filters. Use a soft cloth or a bit of cotton wool. This assembly is easily damaged if it is dropped. Generally, the damage is one or more of 3 problems. Therefore, if it is dropped, the operator should inspect as follows:

1. Bent attachment flange - This can be straightened, but any black paint that is scratched must be replaced to prevent errors due to reflection. Use dull, flat black paint.

2. Green glass filters broken - Return the instrument pack to the factory for replacement of the filter

3. Meter needle broken, stuck, or disengaged - Return the instrument pack to the factory for repair or replacement, depending upon extent of damage. To determine whether this type of damage has occurred, remove the instrument pack and hold it horizontally. Observe the pointer as you move the meter right and left. The needle should smoothly move a bit to each side and then re-center. Now push and hold the button and shade the photocells, first one, then the other. The needle should move quickly and smoothly from side to side. Release the button and the needle should re-center. If the needle moves in jumps, the meter is damaged. If the needle moves slowly, the battery is likely depleted. If it does not move at all, the battery needs to be replaced.

OTHER FLUIDS

The Aqua-Glo Water Detector Kit can be used to determine the undissolved water content of fluids that are not in the jet fuel category but there are several factors that must be considered. First of all, material compatibility of the detector pad holder and its various components must be studied. The quick disconnect nipple is made of Type 303 stainless steel. The detector pad holder itself and the toggle valve are anodized aluminum. Seals are Buna N. Tubing is urethane. Components made of other materials are available and will be quoted on request. Another consideration is the detector pad itself. Certain alcohols may remove the fluorescein coating. Strong chemicals may damage the filter paper pad itself.

Low boiling point fluids, such as LNG, butane, etc., create special problems that require consideration. First of all, the volume of a fluid that evaporates rapidly cannot be determined in the open bottle that is provided in the kit. Several methods can be used, depending on the test fluid. One method is to use a sample bomb. Another is to place a graduated cylinder in a refrigerated bath. Precautions must also be taken to prevent condensation of moisture on the cold detector pad after the pad has been removed from its holder. An effective way to handle this is to immediately drop the pad in a beaker containing clean, dry kerosene. The use of dry kerosene as a “conditioner” is required whenever a test is to be performed on a non-jet fuel fluid. The reason is that the calibration of the Aqua-Glo scale is based on a jet fuel damp detector pad.

Gasoline - No special procedure is required when testing gasoline, except that the pad must be placed in clean, dry kerosene (jet fuel) briefly before blotting it between paper towels. See Rating Procedure. This is a necessary step to prevent moisture from humid air from condensing on the pad as it cools during evaporation of the gasoline. Also, the Aqua Glo instrument is calibrated with a kerosene-damp pad and this procedure will insure that condition.

Heating oil and diesel fuels- Some oils and fuels such as diesel, fuel oil and lubricating oils have a natural fluorescence (they glow in ultraviolet light). This can cause an error. You can predetermine the error to allow you to correct the reading, if any, in the Aqua-Glo. Simply dip a new pad in the oil to be tested; then blot it as instructed above and take a reading. This number must be subtracted from a test result for water. Alternatively, you can eliminate the error by flushing the pad, after testing, with known dry kerosene or jet fuel.

Additives in fuels, including jet fuel, have variable effects on readings. Generally, heating oil additives tend to mask the presence of water, but experience to date indicates that additives in jet fuel tend to cause slightly higher readings.

CARE OF THE COMPARATOR CHAMBER

The inside surfaces of the chamber must be kept clean. Dust and dirt often glows brilliantly in ultraviolet light and this will cause a reading error. To test for such dirt, turn on the light in a dark room with the instrument pack removed. Remove all glowing particles inside of the comparator chamber, being careful not to scratch off the black paint. Do not move or remove the iris diaphragm from its installed position because it has been carefully positioned at the factory and cannot be reset in the field without a special gauging tool.

COMMENT

The measurement of water in jet fuel has occupied our staff for more than 50 years. We have learned from this experience that the variables are infinite and that no device or procedure has ever been developed that can be called a “referee” method.

The water content of jet fuel is constantly changing as the humidity of the air above it changes. Temperature has a substantial influence. As a general rule, 1 ppm of water will come out of solution for every degree of temperature reduction if the fuel sample is water saturated. The average jet fuel will have about 70 ppm of water in solution at 70°F. At 60°F, the dissolved content is only 60 ppm. Sampling connections that are long enough to permit temperature changes will always cause anomalous results. If cooling takes place, the reading will be high and vice versa.

It is possible for free water to remain for several hours in jet fuel that is not saturated. Why water will dissolve almost instantly up to saturation in one jet fuel and not in another has never been explained.

The Aqua-Glo Water Detector Kit has been used very extensively in the testing of filter separators. The Karl Fischer titration method measures the total water content, dissolved and undissolved, while the Aqua-Glo method only measures the free water - undissolved. Filter separators that are used to remove water from jet fuel will not remove dissolved water so Karl Fischer titration is not useful. Another problem with the Karl Fischer method is that the fuel is usually below saturation even after it has passed through the filter separator. If the filter separator is allowing 20 ppm of free water to pass and the fuel is 20 ppm below saturation, the Karl Fischer results will show that there was no free water. The Aqua-Glo kit will accurately report 20 ppm.

NOTE

The Aqua-Glo Water Detector Kit that has been supplied to you is the Series III model that replaced the Series II in 1983. We are pleased to advise you that substantial improvements have been made in the ultraviolet light unit to ensure a longer battery operating period. Other advantages are as follows:

1. The battery recharger is built into the light unit and is not a separate item. Therefore, there is no need to remove the battery to recharge it.
2. You can operate the Aqua-Glo Series II directly from 120 V, 60 Hz, or 50 Hz power by turning the selector switch. If your order specifies 220 V, we wire the circuit accordingly, and identify the assembly with a -1 suffix, e.g. GTP-322-1 or GTP-323-1, depending upon whether it is a standard Aqua-Glo kit or a combination kit.
3. You can also operate from an auxiliary battery, GTP-2404, which may be carried in the field to provide supplementary power. Also order the wire connector GTP-2403.
4. When the change was made from Series II to Series III, the calibration of the Aqua-Glo instrument was not effected because the change was int he ultraviolet light unit only.
5. Series II kits that are now in use can be modified to the new Series III configuration and will fit in the standard carrying case. Contact the factory for a quotation and instructions.
6. You can recharge the auxiliary battery pack through the unit, charging both internal and external batteries at the same time.

OVERHAUL AND REPAIR POLICY

If the Aqua-Glo ever requires repairing, we recommend that it be returned to the factory. Here is the procedure:

1. Call 1-800-524-0287 and ask for the Order Entry department. Explain that you want to return an Aqua-Glo kit for repair.
2. You will be given a Returned for Repair Authorization (RFR) number which you must mark on the package.
3. Ship the complete instrument to us at your expense. Be sure to include the Calibrating Standard in the shipment. We strongly urge that you make shipment in the original carrying case for safety in transport. If any items in your kit have been lost, be sure to tell us so that we can quote the price of replacements.
4. Within one day after receipt of your kit, we will prepare an estimate of the cost of repairs and notify you of the amount. If you elect to have us proceed with repairs, send us a purchase order. We accept most credit cards. If you decide not to have the repairs made, we will return the kit to you at our expense.
5. If the instrument is less than one year old and we determine that the malfunction was not caused by operator abuse, we will make the repairs and return the instrument at our expense.

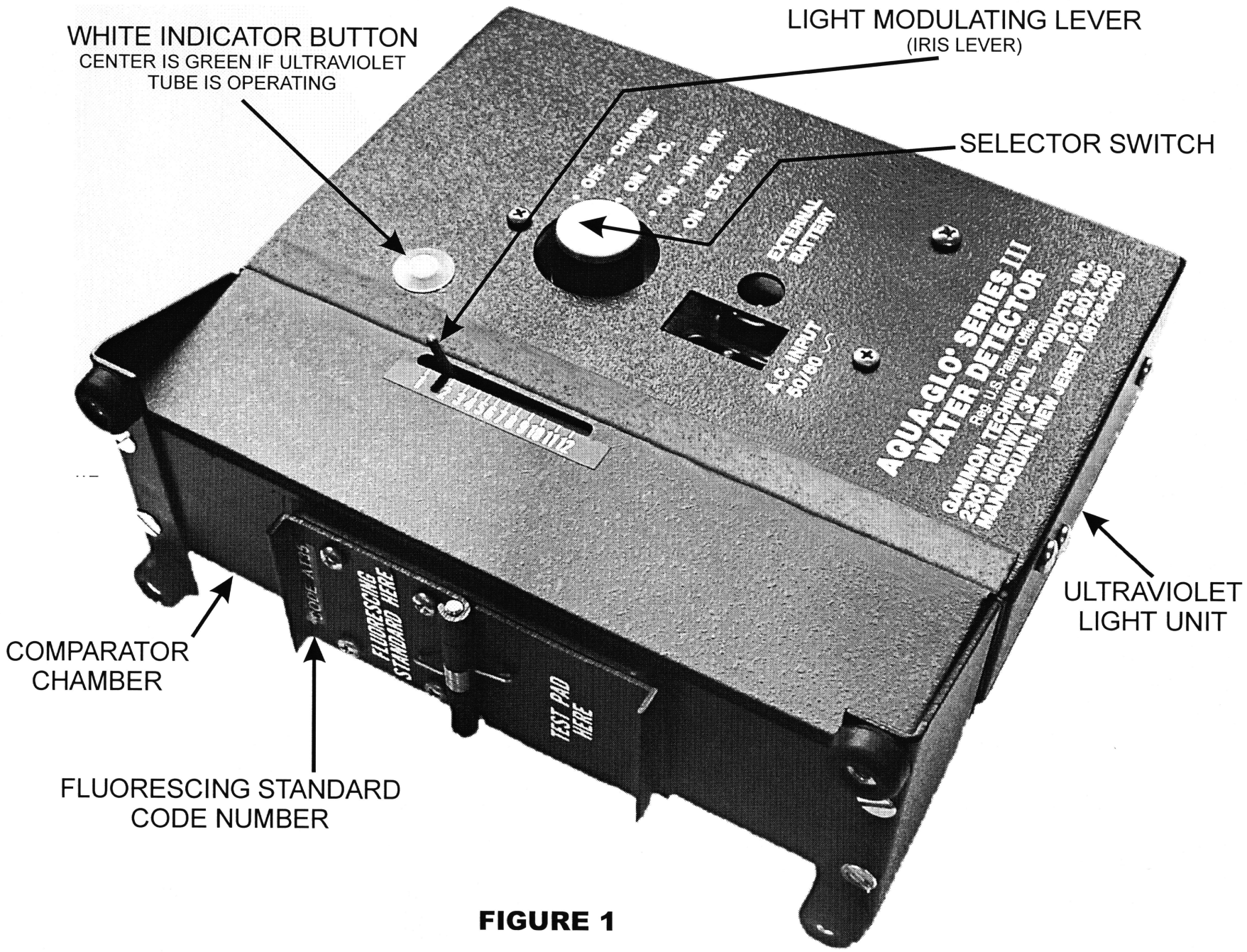
WHITE INDICATOR BUTTON
CENTER IS GREEN IF ULTRAVIOLET TUBE IS OPERATING
LIGHT MODULATING LEVER
(IRIS LEVER)
SELECTOR SWITCH
ULTRAVIOLET LIGHT UNIT
COMPARATOR CHAMBER
FLUORESCING STANDARD CODE NUMBER
OFF - CHARGE
ON - A.C.
ON - INT. BAT.
ON - EXT. BAT.
EXTERNAL BATTERY
A.C. INPUT
AQUA-GLO SERIES III
WATER DETECTOR
FLUORESCING STANDARD HERE
TEST PAD HERE

FIGURE 1

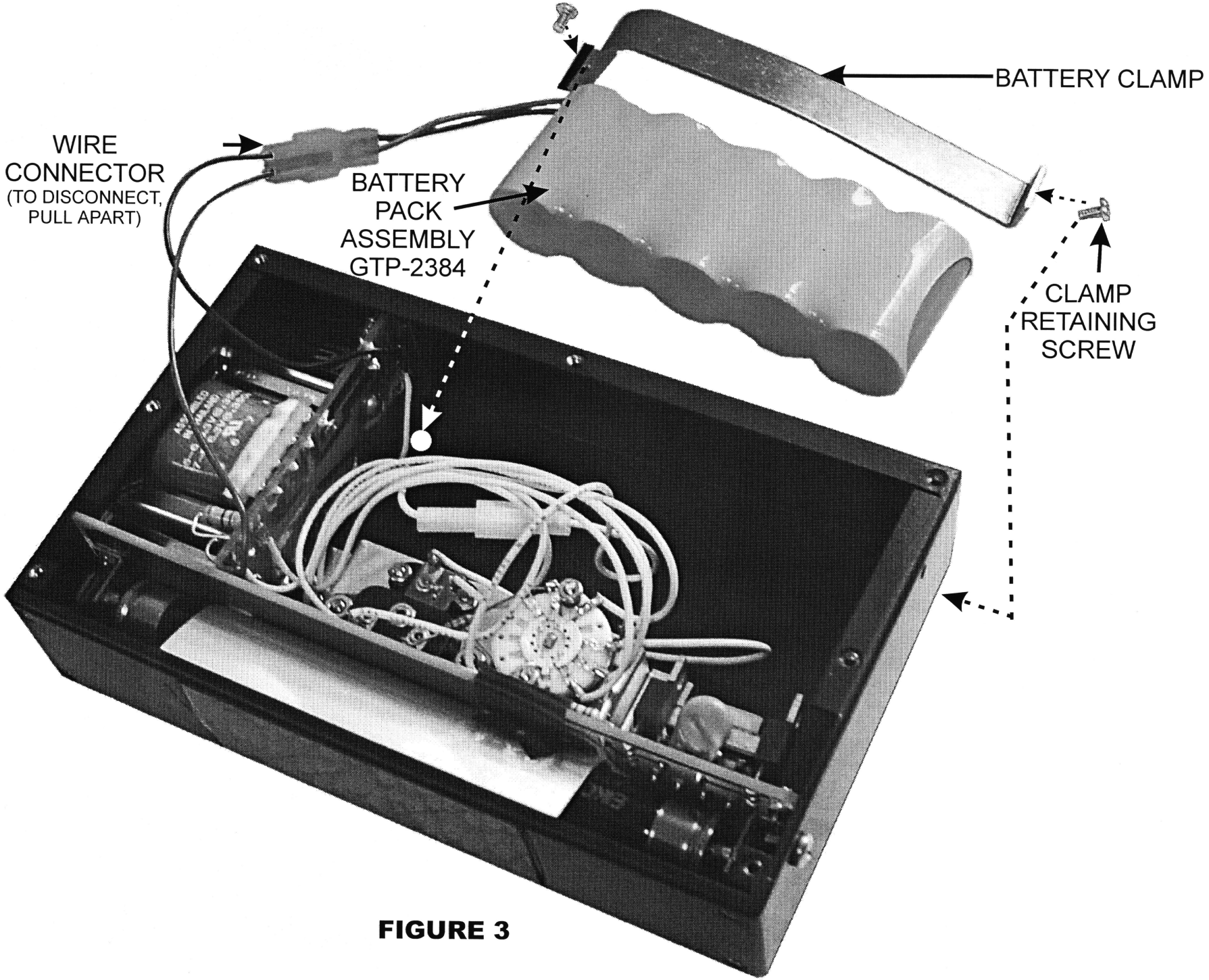
BATTERY CLAMP
WIRE
CONNECTOR
(TO DISCONNECT,
PULL APART)
BATTERY
PACK
ASSEMBLY
GTP-2384
CLAMP
RETAINING
SCREW

FIGURE 3

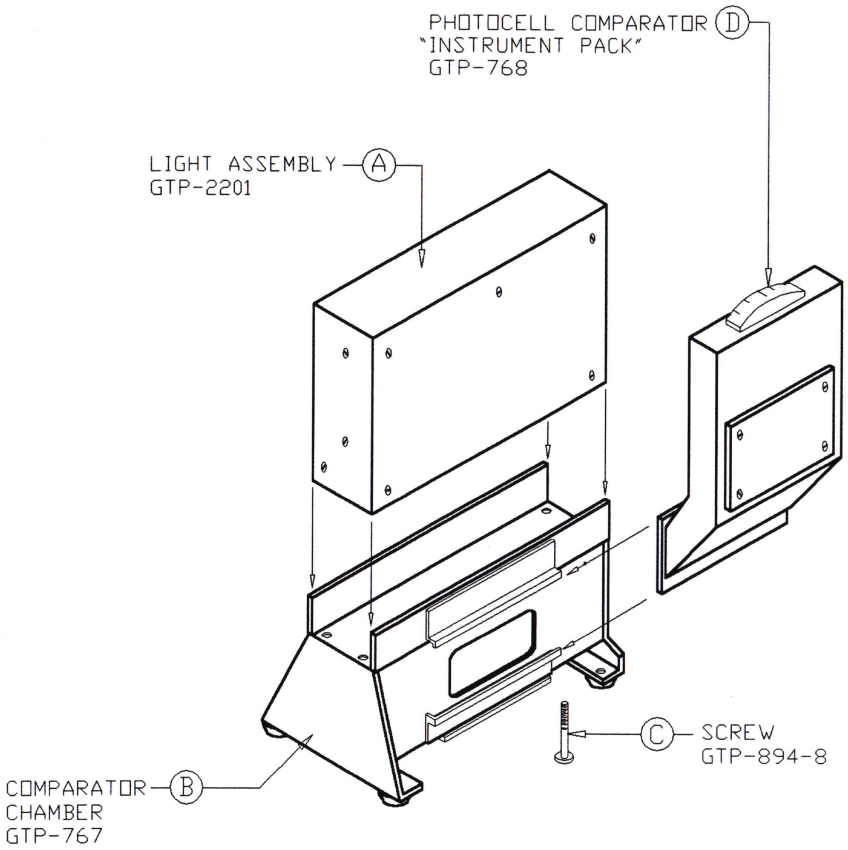

FIGURE 2
AQUA-GLO
SERIES III ASSEMBLY
GTP-766

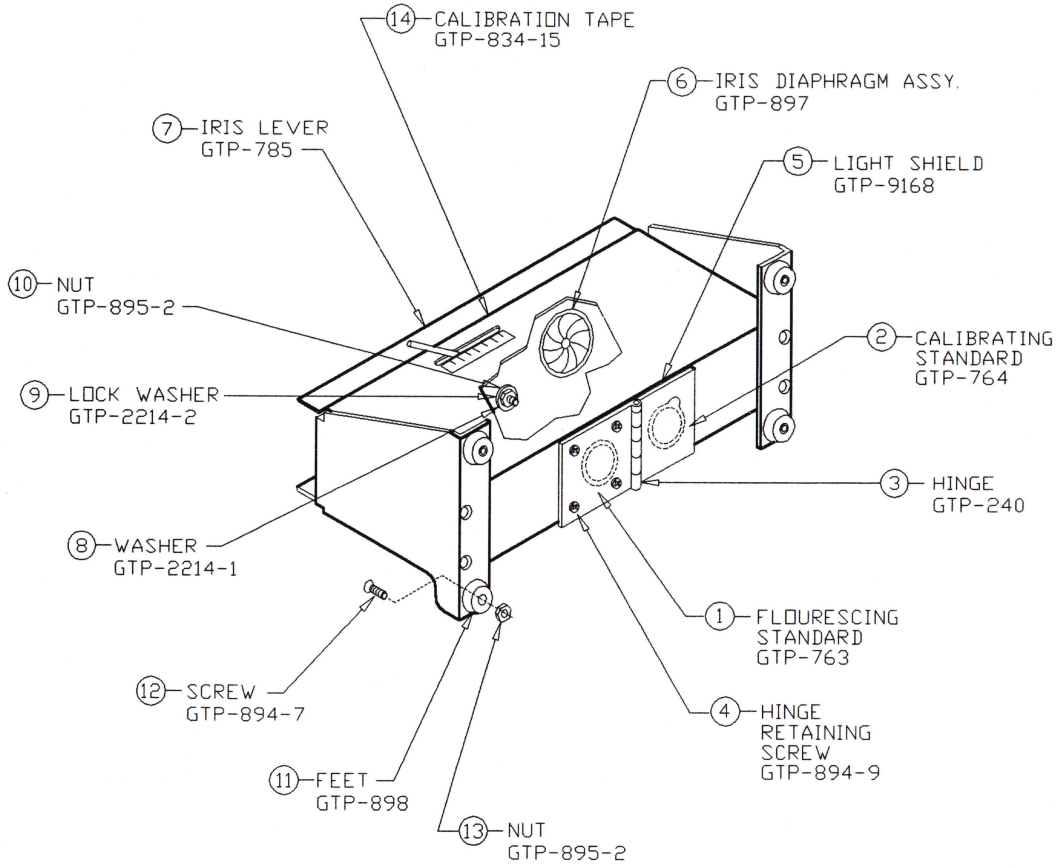

FIGURE 4
COMPARATOR CHAMBER
GTP-767

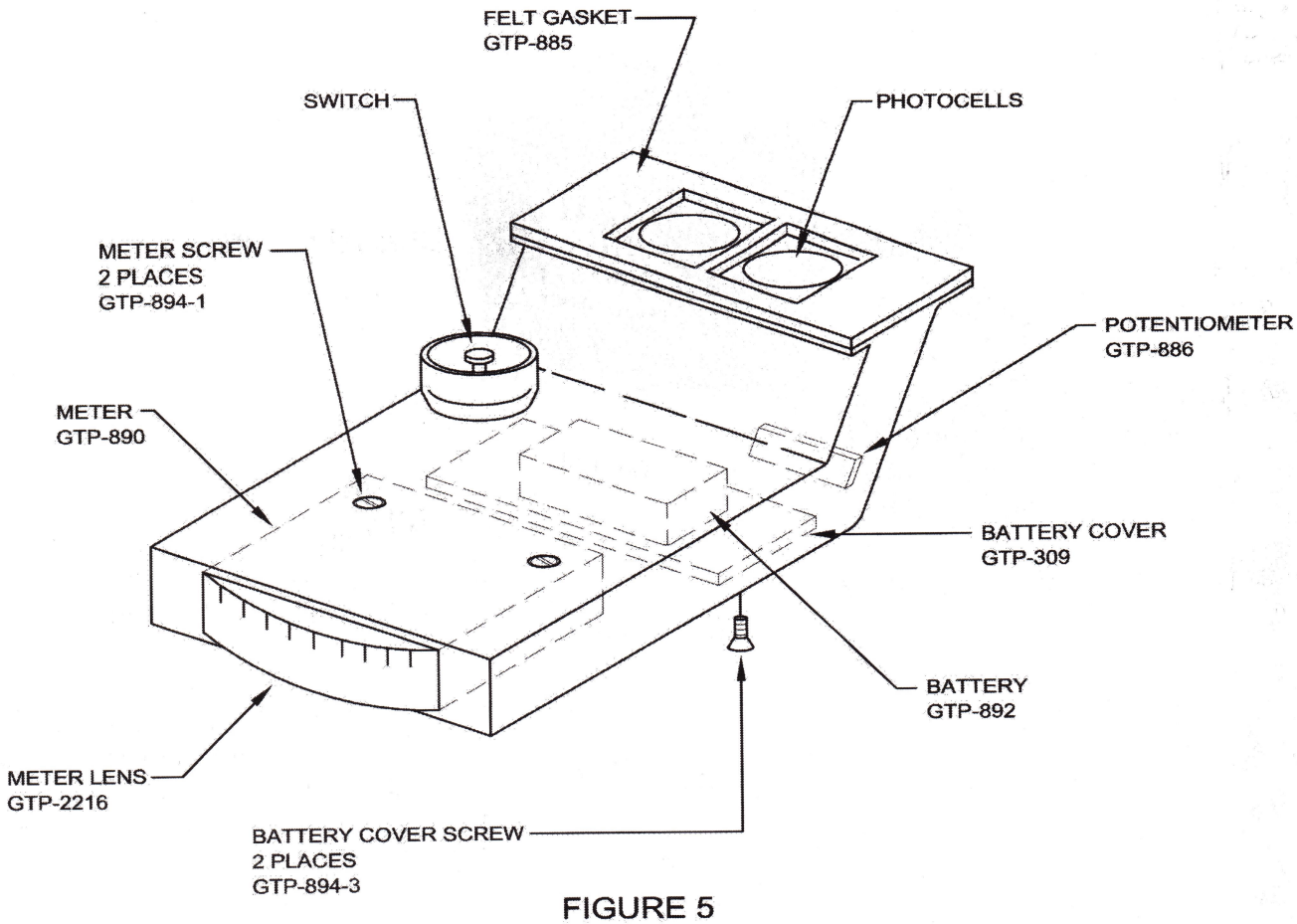

FIGURE 5
PHOTOCELL COMPARATOR
" INSTRUMENT PACK "
GTP-768

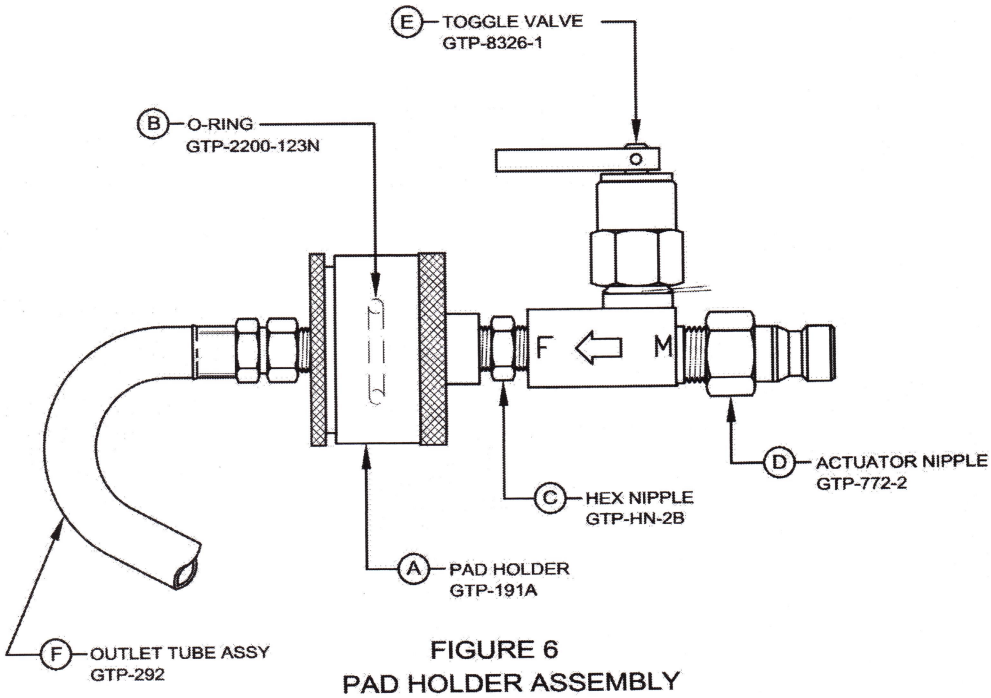

FIGURE 6
PAD HOLDER ASSEMBLY
GTP-191

AQUA-GLO SERIES V ABBREVIATED PROCEDURE

1. Locate or provide a suitable quick disconnect fitting to obtain a sample from a flowing pipe.

2. Inspect the instrument pack: Remove the instrument pack (meter unit) from the slide rails on the side of the comparator chamber. Hold it in a horizontal position with the photocells facing upward at an angle. Depress and hold the switch button with a finger of the same hand. Move your other hand to shade first one photo cell, then the other. If the meter moves rapidly back and forth across the full scale, it is in good condition. If not, replace the 9VDC battery. If the meter has been damaged return the instrument pack to GTP for inspection.

3. Calibration: Place the calibrating standard in the test pad window, colored side inward, noting the “set point”. Check the code number on the calibrating standard to be sure it has the same code as the fluorescing standard. You must not use the calibrating standard from one Aqua-Glo on another unit. Turn on the ultraviolet light by rotating the switch knob to the power source you are using: AC, internal battery, or external battery. Watch the green indicator on the side of the comparator chamber and make sure it illuminates. If it does not illuminate, the main battery (GTP-2324) needs recharging. (Alternately, you can run the Aqua-Glo on 115-240 VAC, even while the battery is recharging.)

   Depress the push button on the instrument pack. Move the lever on the back of the comparator chamber to the end of its travel, below the “1” mark on the scale. Move it up the scale until the needle on the meter settles for 10-15 seconds at the “O” point. Read the position of the lever along the calibrated scale. If the reading is not the same as the “set point”, make an adjustment of the potentiometer with the screwdriver. To do this, first remove the plug screw at the 45 degree angle on the instrument pack. Using the small jeweler’s screwdriver in the kit, adjust the potentiometer with slight movements.

   Repeat the reading process until you get the correct scale reading. Reinsert the plug screw. Remove and store the calibrating standard. Turn off the UV light.

4. Flush the sampling port (quick disconnect) by connecting the Pad Holder without a water detector pad installed. Lift the handle of the inlet valve and allow 1 liter to pass into a jar or other convenient container.

5. After disconnecting the Pad Holder assembly from the sampling port, install a water detector pad from the sealed envelope. The pad fits in the outlet half. Be careful not to touch the orange coating with fingers or to allow any water contact. The orange coating must face toward the inlet. If the pad is yellow, it is unusable.

6. Assemble the pad holder. Run the test immediately, or the pad will spoil. Hold the calibrated bottle so that the outlet flow from the discharge tube enters the bottle.

7. Open the toggle valve. Close it again when you have collected 500 ml.

8. Remove the Pad Holder assembly from the quick disconnect and take the pad from the holder with tweezers. Blot the pad 3 or 4 times between dry paper towels using the heel of your hand for pressure. Do not rub.

9. Place the pad under the hinged flap with the orange side facing in.

10. Switch on the ultraviolet light using the rotary selector switch. Make sure the light indicator on the side of the comparator chamber is illuminated (green tint). Depress the push button on the instrument pack.

11. Move the lever on the back of the comparator chamber until the meter needle settles for 10-15 seconds at the “O” point.

12. Turn off the UV light using the rotary selector switch and read the position of the lever along the calibrated scale; estimate to one tenth, such as 3.7. This means 3.7 ppm free water content.

13. If you cannot center the meter, move the lever to the position where the needle is closest to the zero. Look at the lever. If the lever is below the “1” mark, you have less than 1 ppm. If the lever is at the “12” end of the scale, you have more then 12 ppm (and a problem).